Color-Keyed®

CATALOG NO. 54107

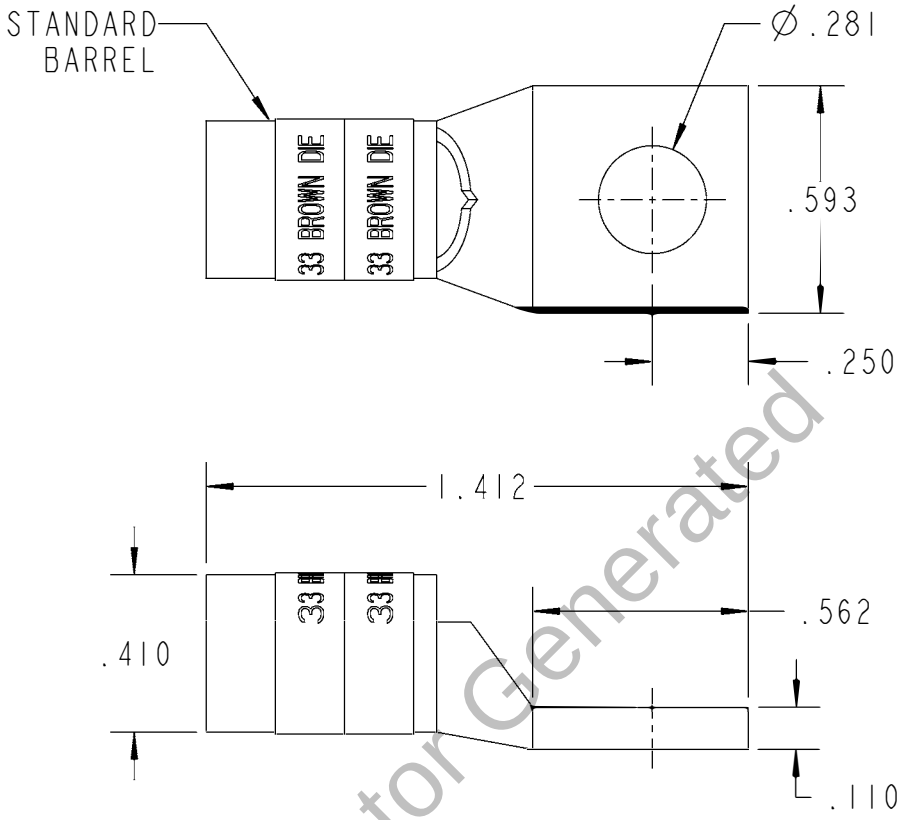

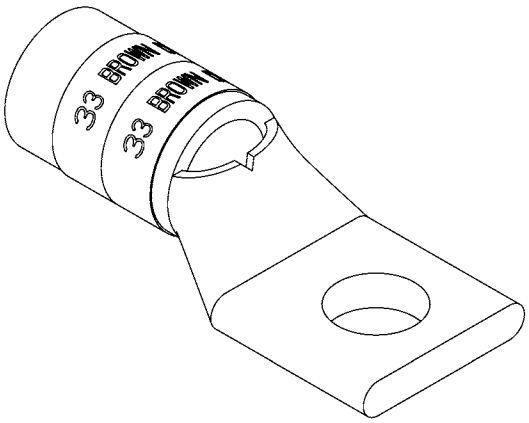

WIRE SIZE: #2 AWG
MATERIAL: HIGH CONDUCTIVITY
COPPERFINISH: TIN PLATED

Configurator Generated

GENERAL NOTES

1. ALL DIMENSIONS ARE FOR REFERENCE ONLY.
2. DIMENSIONS IN BRACKETS [ ] ARE IN METRIC UNITS.

REVISIONS

** SEE ERN (****) FOR APPROVAL SIGNATURES & RELEASE DATE. PROJECT NO: ****

Thomas&Betts
www.tnb.com

DESCRIPTION: 1 HOLE LUG

ORIGINAL PROJECT NO / (ERN NO)	SHEET NO:	REV. NO:	DRAWING NO: WSD-001951
/ ( )	1 OF 1	0	54107

THIS DRAWING IS INTENDED FOR DESCRIPTIVE PURPOSES ONLY. AND THE RIGHT IS RESERVED TO DEVIATE FROM ANY OF THE DETAILS SHOWN HEREON.
©2005 Thomas & Betts - Proprietary, All Rights Reserved